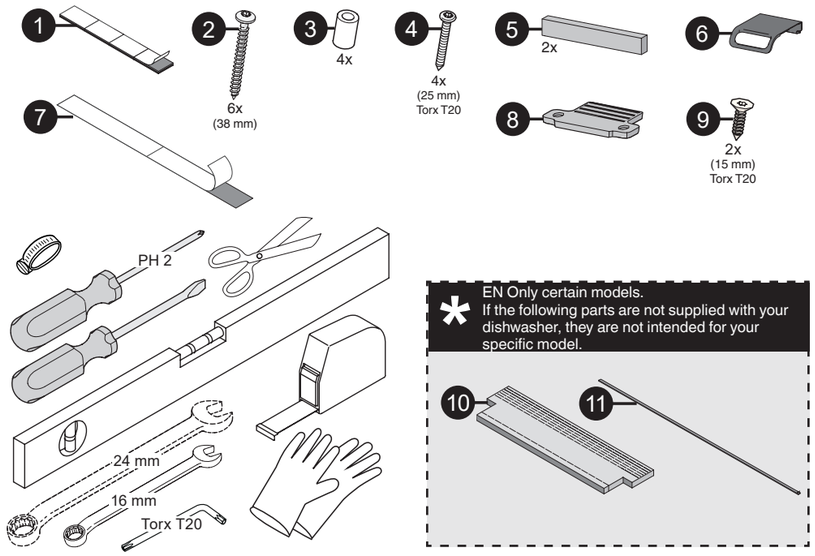

* EN Only certain models.
If the following parts are not supplied with your dishwasher, they are not intended for your specific model.

1

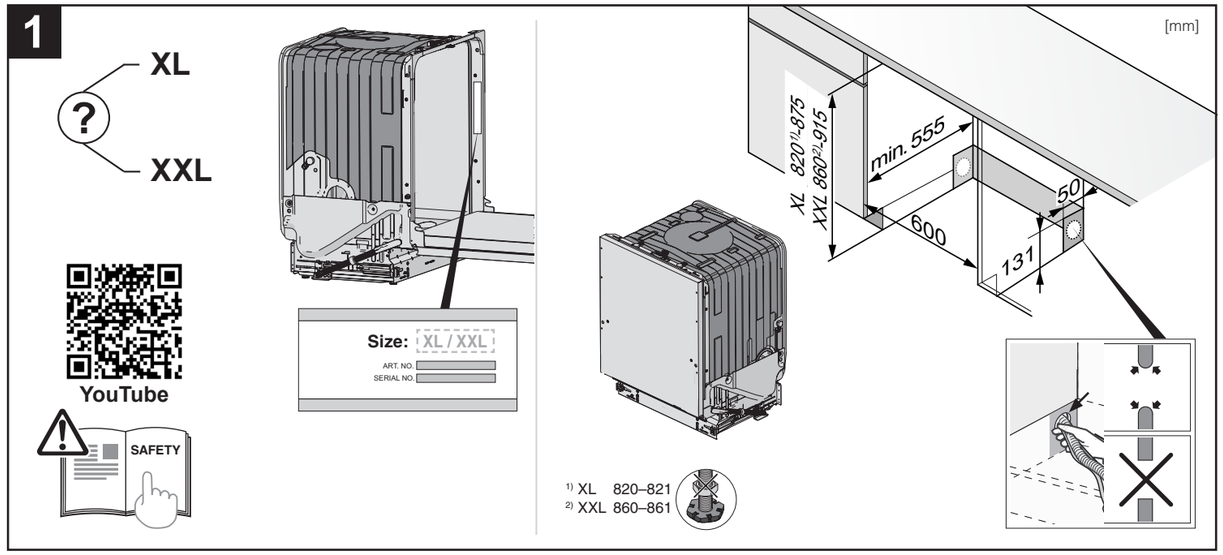

2

3

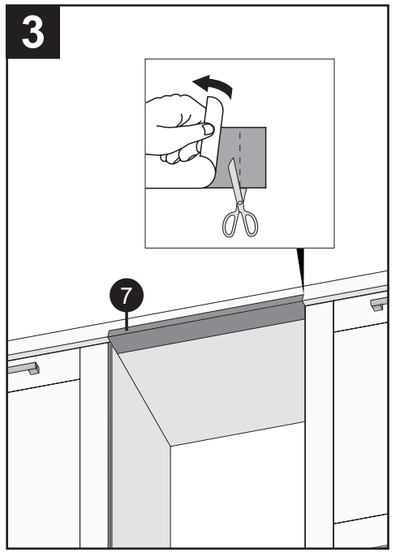

4

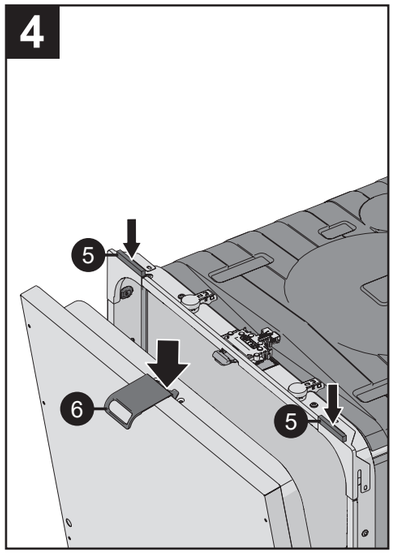

5

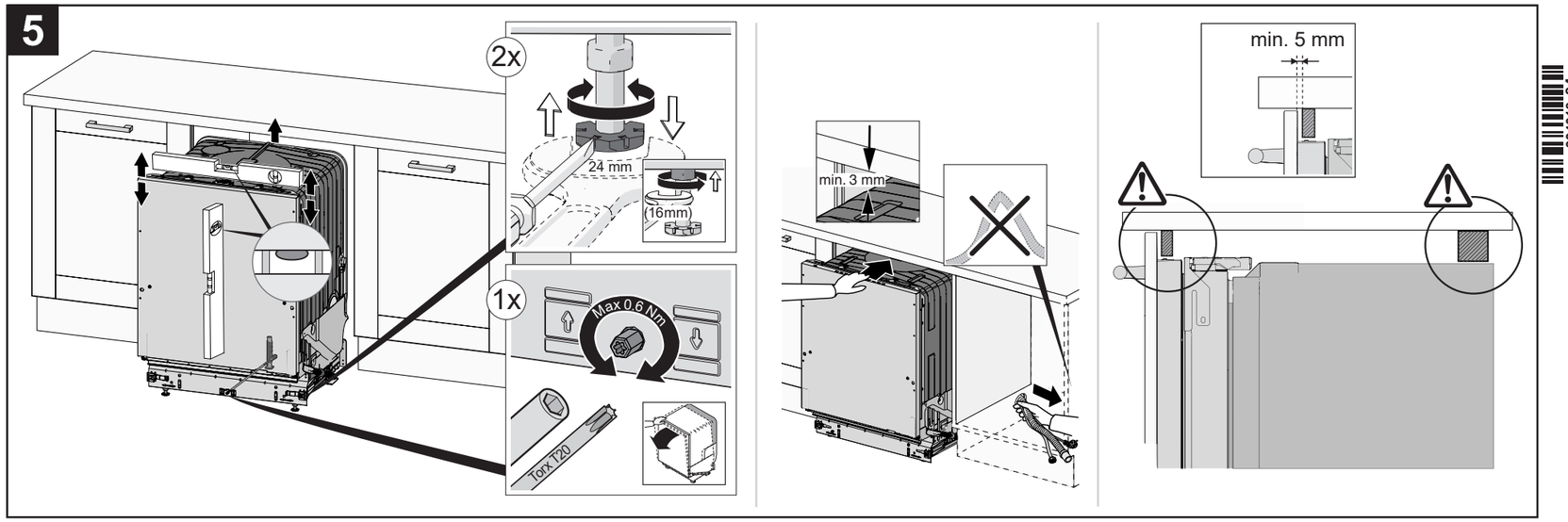

6

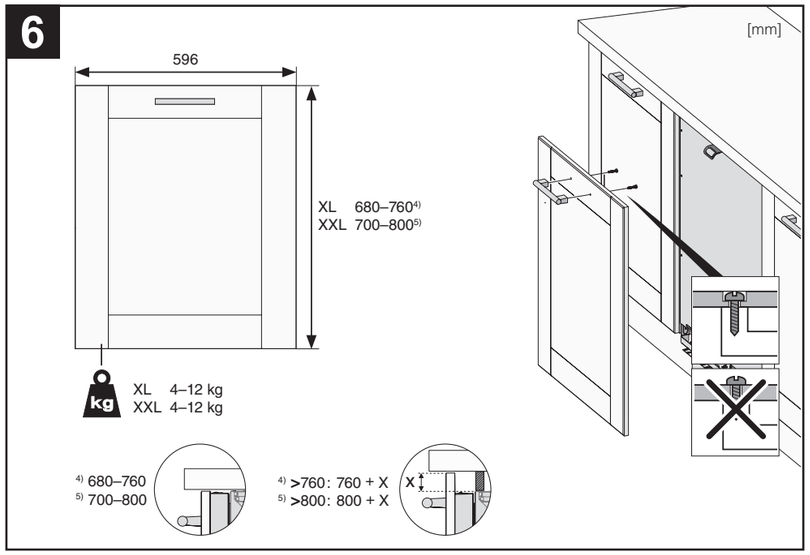

7

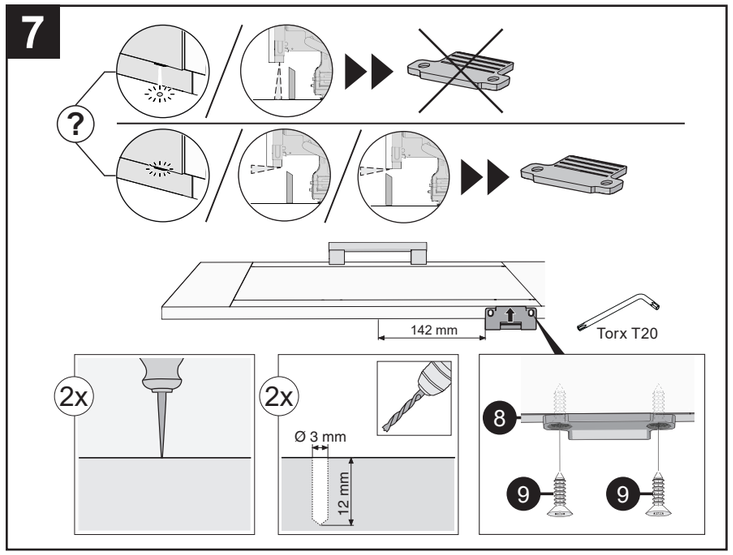

* Only Certain Models

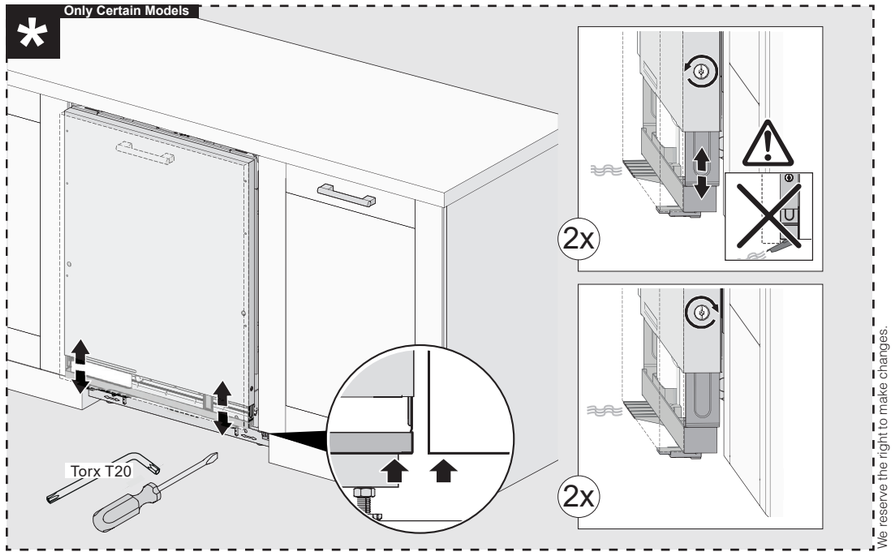

934018-04

We reserve the right to make changes.

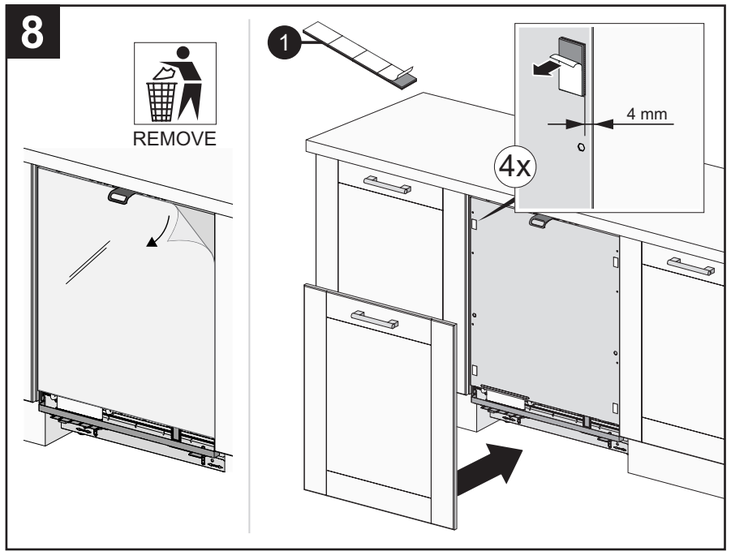
8
REMOVE
1
4 mm
4x

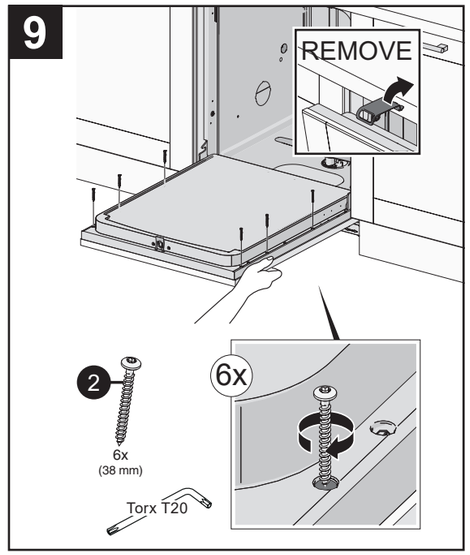
9
REMOVE
2
6x
(38 mm)
Torx T20
6x

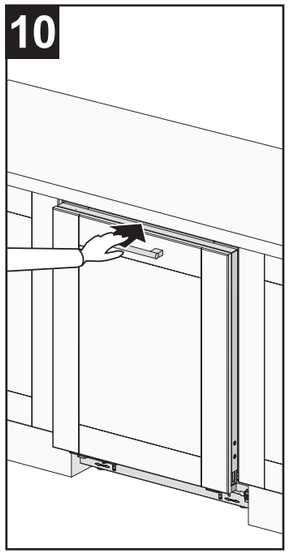
10

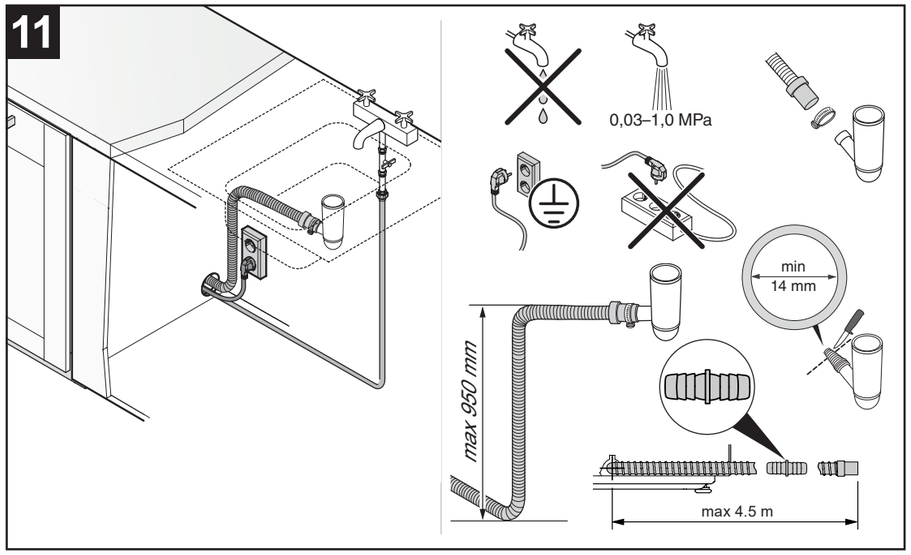
11
0,03–1,0 MPa
min
14 mm
max 950 mm
max 4.5 m

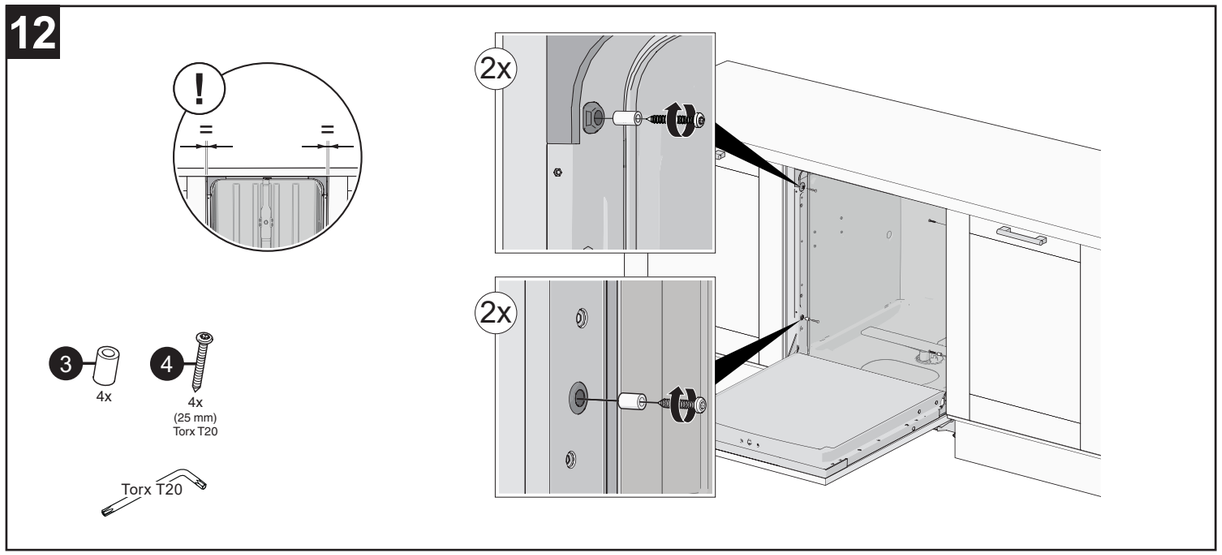
12
!
=
=
2x
2x
3
4x
4
4x
(25 mm)
Torx T20
Torx T20

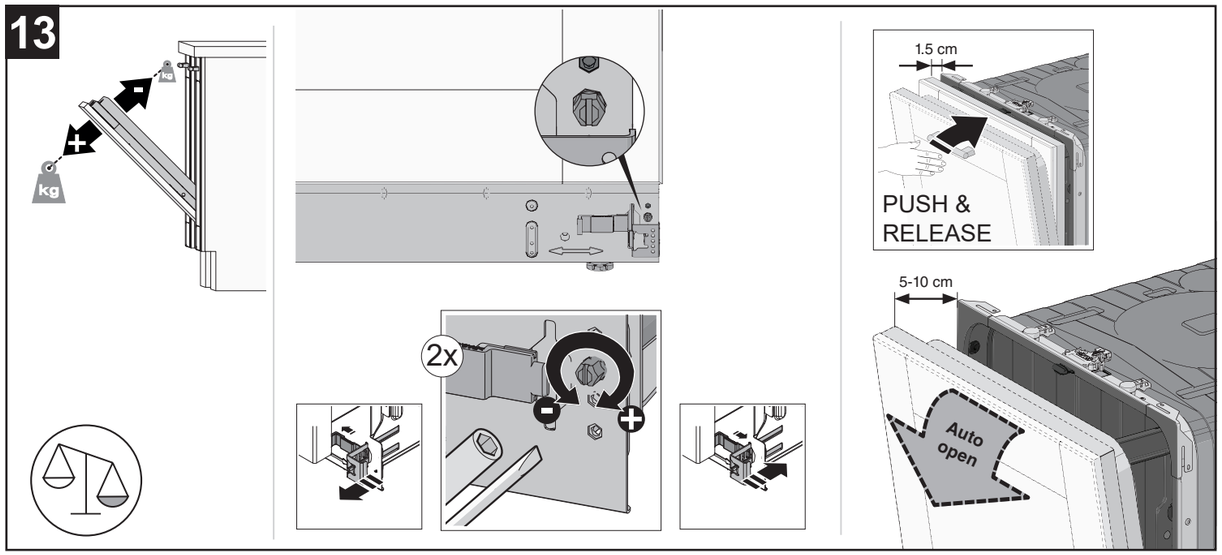
13
kg
kg
2x
1.5 cm
PUSH &
RELEASE
5-10 cm
Auto
open

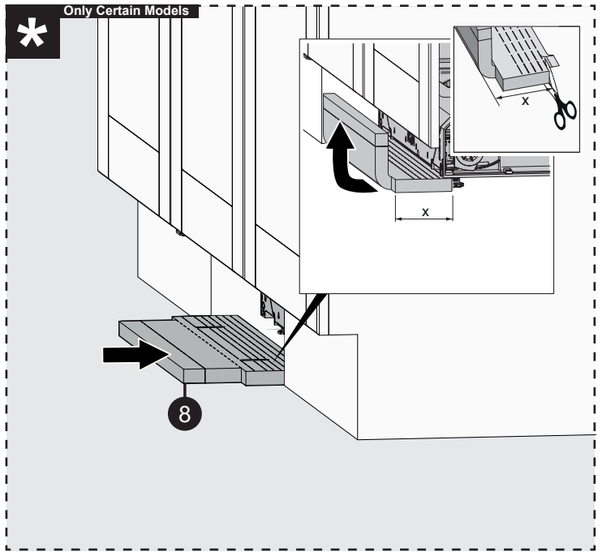
*
Only Certain Models
x
x
8

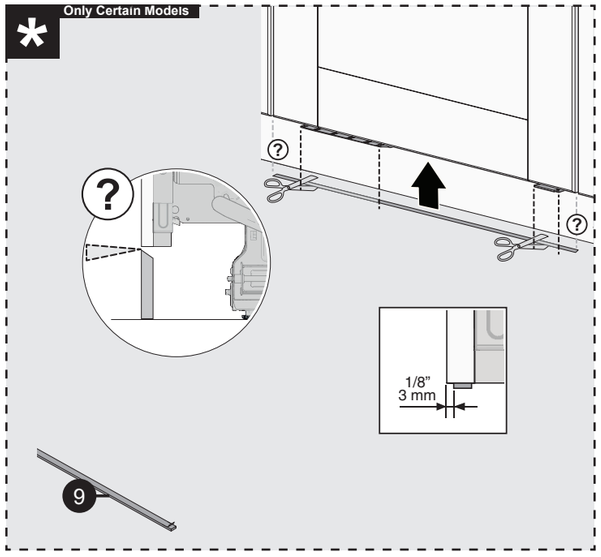
*
Only Certain Models
?
?
?
1/8"
3 mm
9

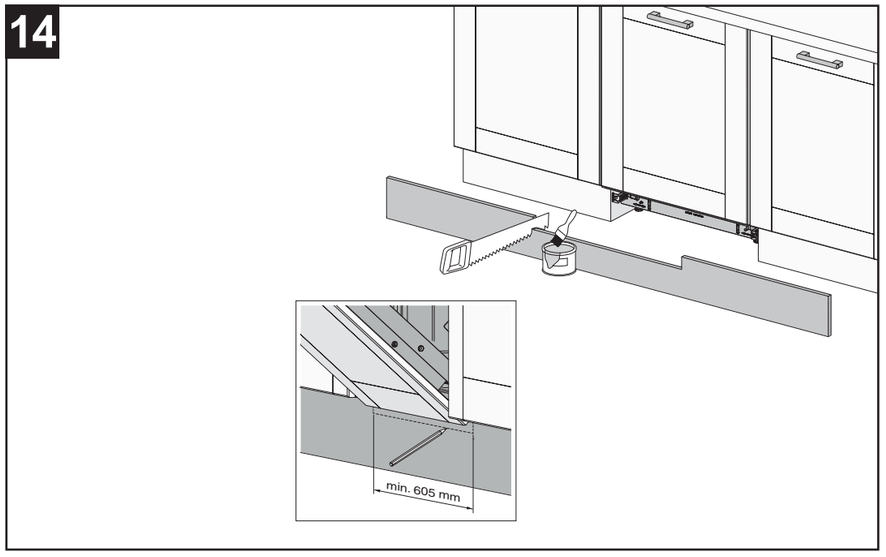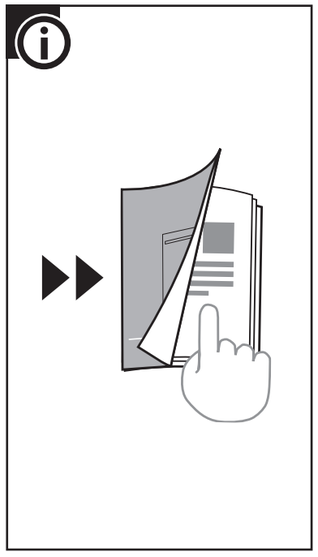
14
min. 605 mm