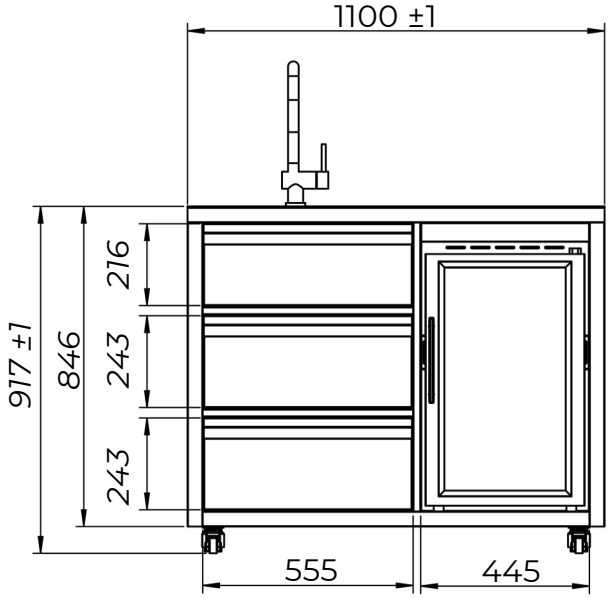

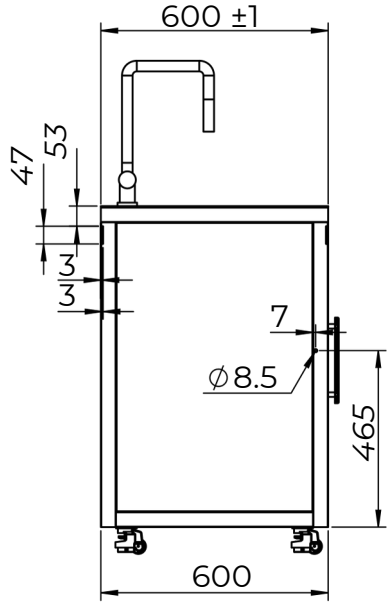

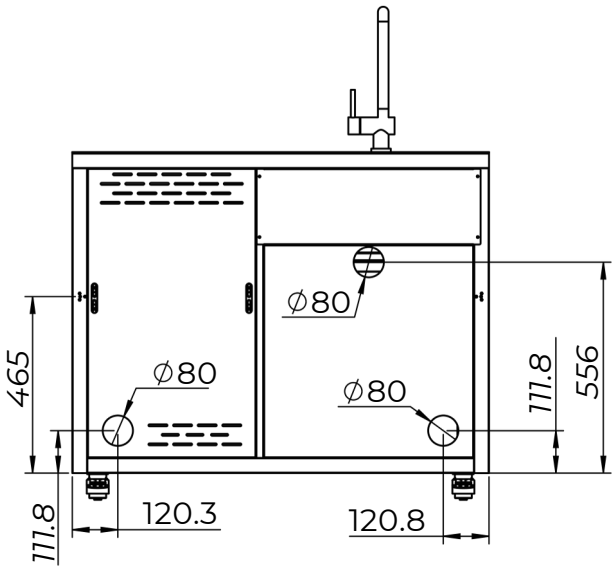

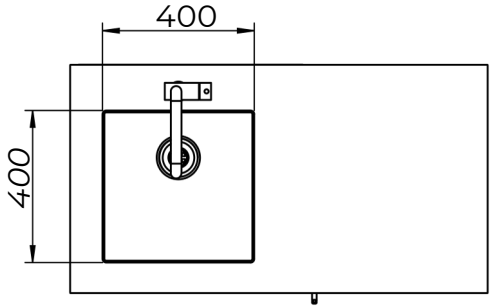

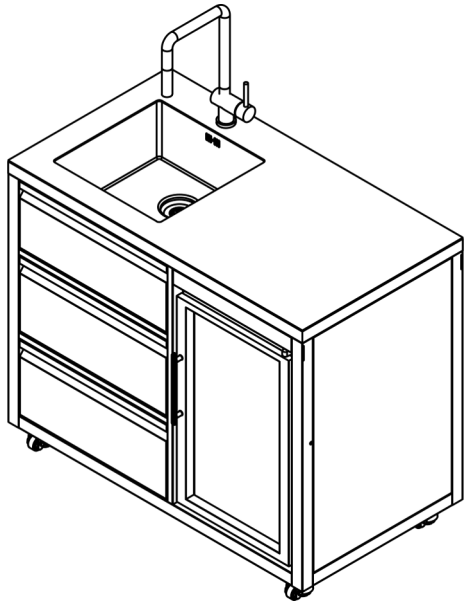

OCE Item No.: TL5100 | Art No.: D2144

Name: Outdoor Kitchen Module with refrigerator tap and sink